Relief Valves Catalog
Differential Area
CP200-2

OPERATION

This is a direct acting differential area poppet type relief valve that relieves from 2 to 1.

SPECIFICATIONS

Theoretical performance

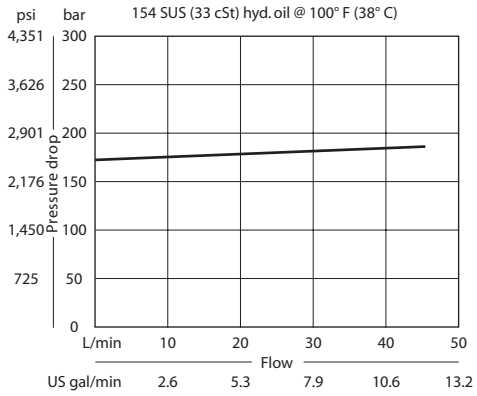

Schematic

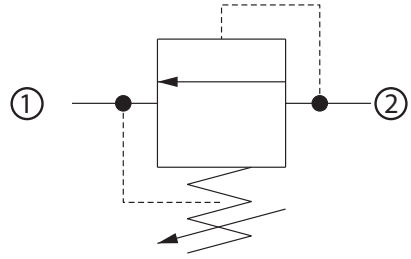

Specifications

Rated pressure	350 bar [5075 psi]
Rated flow	40 l/min [11 US gal/min]
Leakage	10 drops/min @ 80% of crack pressure
Weight	0.21 kg [0.46 lb]
Cavity	SDC10-2

DIMENSIONS

mm [in]

Cross-sectional view

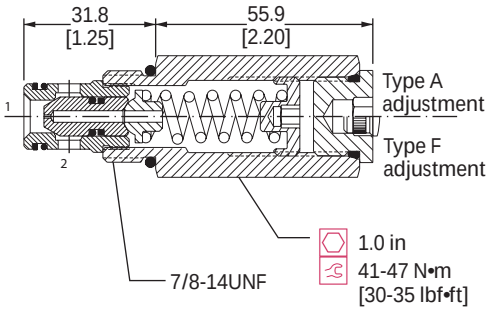

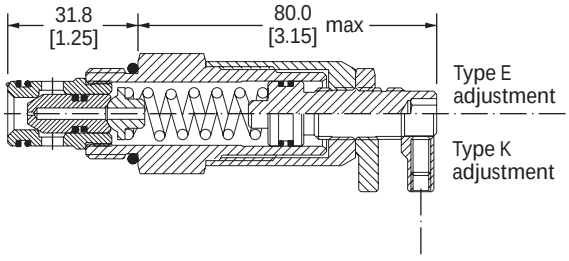

ORDERING INFORMATION

CP200-2- B - 6S - E - D - 150

Seals

	Seal kits
B = Buna-N	120015
V = Viton	120016

Housing and ports

0	=	No Housing
DG3B	=	Al, 3/8 BSP
DG4B	=	Al, 1/2 BSP
6S	=	Al, #6 SAE
8S	=	Al, #8 SAE

Other housings available

Housing P/N

No Housing
SDC10-2-DG-3B
SDC10-2-DG-4B
CP10-2-6S
CP10-2-8S

Adjustment options

A = Internal
F = Tamper resistant
E = External
K = Knob

Adjustment ranges

	bar	psi
D =	69-345	[1000-5000]
Standard	103	[1500]

Crack pressure

Code x 10 = psi
Example: 150 = 1500 psi