OPERATION

This valve is a 3-way double hydraulically piloted spool.

Schematic

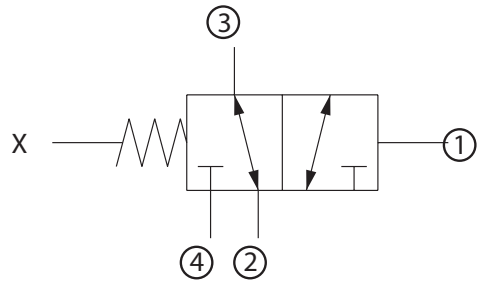

SPECIFICATIONS

Theoretical performance

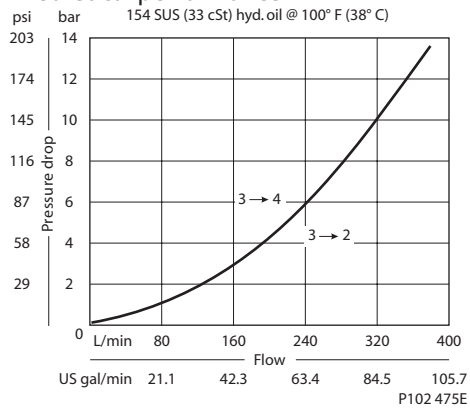

Specifications

Rated pressure	210 bar [3000 psi]
Rated flow at 7 bar [100 psi]	265 l/min [70 US gal/min]
Weight	1.22 kg [2.68 lb]
Cavity	SDC20-4

DIMENSIONS

mm [in]

Cross-sectional view

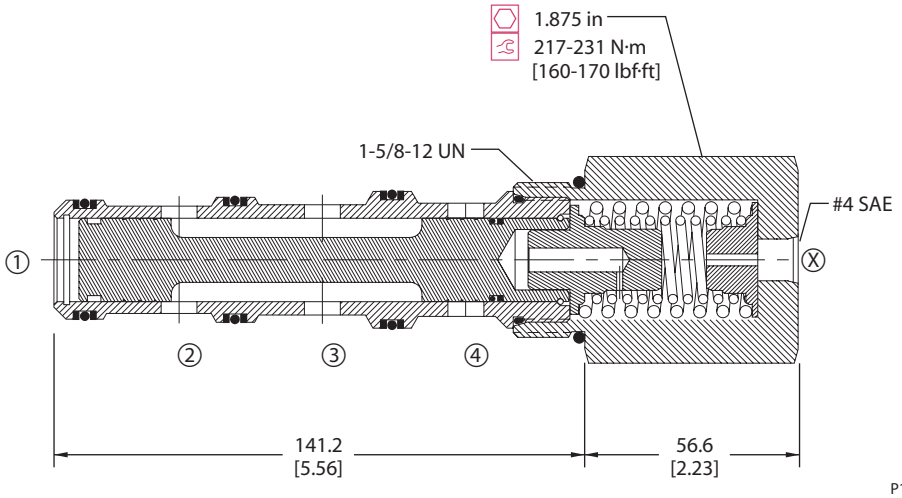

ORDERING INFORMATION

CP723 - 2 - B - 20S - 150 - S1

Spool seals
S1 = Seal at top of spool
S2 = Seals at top and bottom of spool
S3 = No seals
S4 = Seal at bottom of spool

Seals

		Seal kit
B	= Buna-N	120181
V	= Viton	120182

Housing and ports

		Housing P/N
0	= No Housing	No Housing
8B	= AL, 1 BSP	CP20-4-8B
10B	= AL,1-1/4 BSP	CP20-4-10B
16S	= AL, #16 SAE	CP20-4-16S
20S	= AL, #20 SAE	CP20-4-20S

Other housings available

Shift pressure

		bar	[psi]
050	=	3.5	[50]
080	=	5.5	[80]
100	=	6.9	[100]
130	=	9.0	[130]
150	=	10.3	[150]

shift pressure assumes no seals

P102 956E