OPERATION

Solenoid Valve, Spool Type, 3-Position, 4-Way, High Flow (15-Size). When de-energized, the SV15-34-04 allows flow from port 3 to port 1, while ports 2 and 4 are blocked. When coil S1 is energized, the spool shifts to allow flow from port 3 to port 2, and from port 4 to 1. When coil S2 is energized, the spool shifts to allow flow from port 3 to port 4, and from port 2 to port 1. Follow the "Operating Envelope" limits to ensure shifting of the valve during operation. This valve is a direct replacement for EDH 12/4308. The SV15-34-04 comes standard with a one-direction, push-pin manual override. When the manual override is pushed, the spool shifts following the logic of energizing S2.

APPLICATIONS

These valves are primarily used in mobile and industrial applications for controlling the direction of the flow in a circuit. Spool valves will have some leakage due to spool clearance, so if your application requires no leakage at the working port(s), apply a low leakage poppet valve(s), like PO check valve, counterbalance valve, etc., in addition to this solenoid valve. This valve can operate with an inlet pressure of 315 bar on port 3 for 300,000 cycles. Port 1 may be pressurized to 150 bar, but is not intended for use as inlet (Tank only).

SPECIFICATIONS

Rated Pressure*	210 bar [3045 psi]**
Maximum Rated Flow at 7 bar [100 psi]	50 l/min [13 US gal/min]
Weight including coil	1.400 kg [3.09 lbs]
Cavity	NCS 12/4
Coil	M19-33W
Diode (Optional)	Unidirectional

* Rated Pressure based on NFPA fatigue test standards (at 1 Million Cycles).

** See 315 bar pressure rating note on page 10.

SCHEMATIC

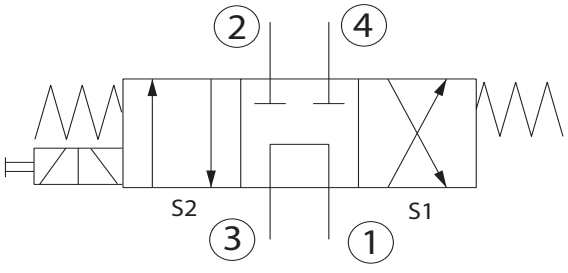

PERFORMANCE CURVES

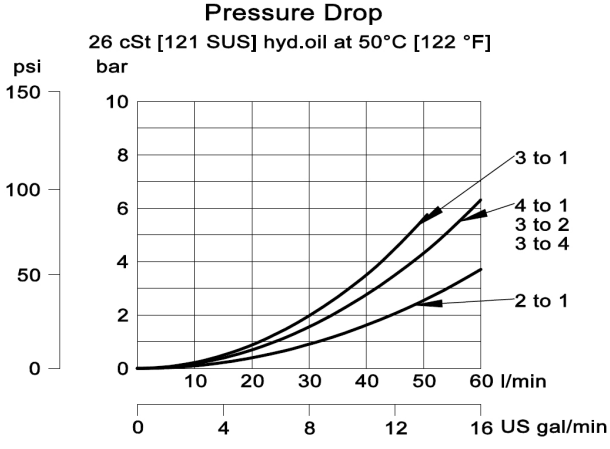

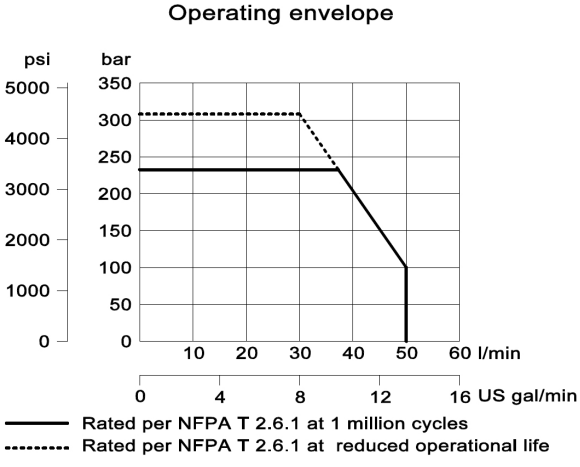

DIMENSIONS

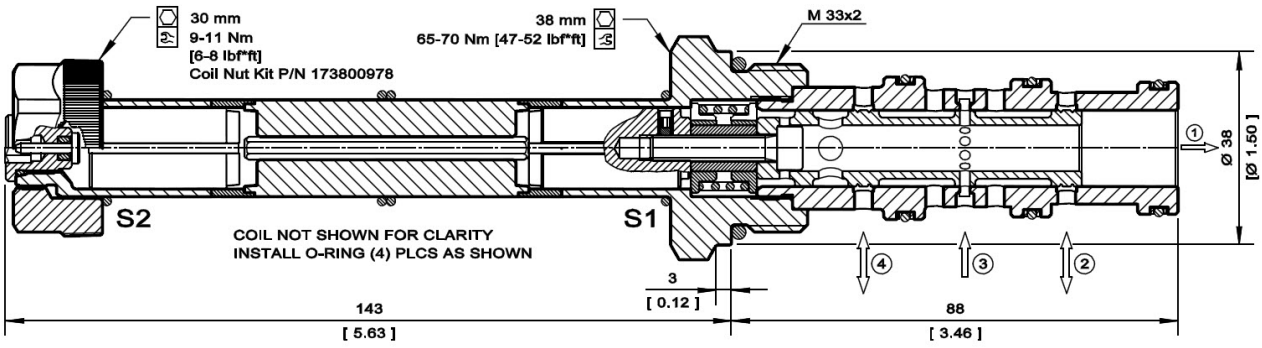

EXAMPLE CIRCUITS

Series Circuit - Open Center

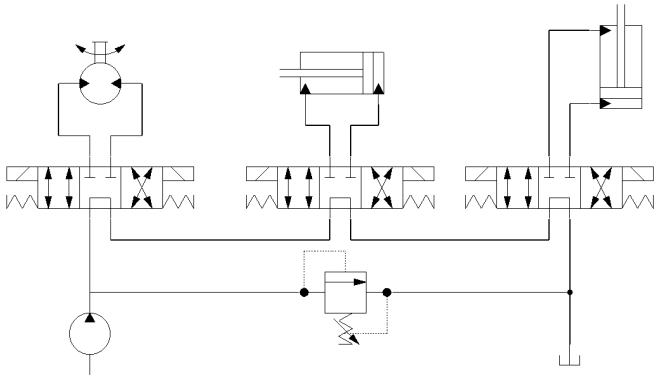

Sequencing Circuit

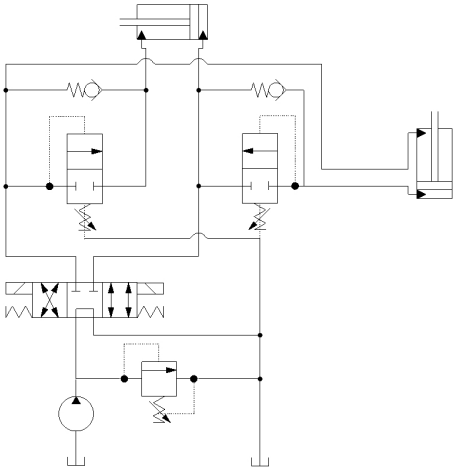

ORDERING INFORMATION

SV15 - 34 - 04 - 12D - DE - B - 00

Solenoid Valve, Spool Type, 15 Size Cavity

34: 3 Position, 4 Way

04: Schematic type

Code	Body and Ports	Body Nomenclature
00	Cartridge Only	No Body
8S	#8 SAE, AL	NCS 12/4-L-8S
12S	#12 SAE, AL	NCS 12/4-L-12S
4B	1/2 BSP, AL	NCS 12/4-L-1/2
6B	3/4 BSP, AL	NCS 12/4-L-3/4

Seal Code	Material	Seal Kits
B	Buna-N	11115884
V	Viton	11115885

Coil Voltage	Standard Coil Code
No Coil, with nut*	**00**
10 VDC	**10D**
12 VDC	**12D**
20 VDC	**20D**
24 VDC	**24D**
110 VAC**	**110A**
220 VAC**	**220A**

* Standard coil – plastic nut and O-rings
** External Rectifier Needed – DN termination only

Coil Termination	Standard Coil Code	IP Rating
No Coil	**00**	-
Amp Junior	**AJ**	IP67
Amp Junior with Diode	**AJD**	IP67
Deutsch	**DE**	IP67
Deutsch with Diode	**DED**	IP67
Flying Leads	**FL**	IP65
DIN 46650	**DN**	IP65